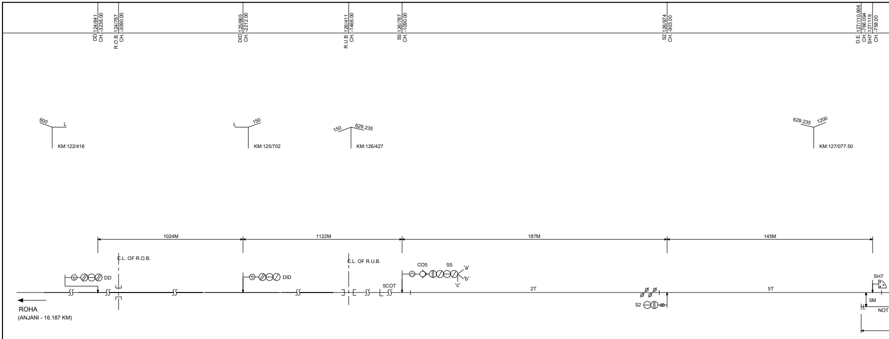
DD 124/641
CH. -3236.00
R.O.B. 124/787
CH. -3090.00
DID 125/665
CH. -2212.00
R.U.B. 126/411
CH. -1466.00
S5 126/787
CH. -1090.00
S2 126/974
CH. -903.00
D.E. 127/110.906
CH. -766.094
SH7 127/119
CH. -758.00
600
L
KM:122/416
L
150
KM:125/702
150
629.235
KM:126/427
629.235
1200
KM:127/077.50
1024M
1122M
187M
145M
C.L. OF R.O.B.
DD
DID
C.L. OF R.U.B.
CO5
S5
'a'
'b'
'c'
5COT
2T
5T
S2
SH7
5M
NOT
ROHA
(ANJANI - 16.187 KM)

DN - SIGNAL ASPECT CONTROL CHART →

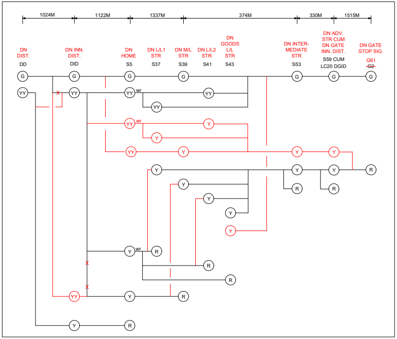
1024M
1122M
1337M
374M
330M
1515M
DN DIST.
DD
DN INN. DIST.
DID
DN HOME
S5
DN L/L1 STR
S37
DN M/L STR
S39
DN L/L2 STR
S41
DN GOODS L/L STR
S43
DN INTER-MEDIATE STR
S53
DN ADV. STR CUM DN GATE INN. DIST.
S59 CUM LC20 DGID
DN GATE STOP SIG.
G61
~~G2~~
G
YY
Y
R
wr

wr - WITH ROUTE INDICATOR

SR. NO.	POINTS NO.	ANGLE OF T/OUT	SR. NO.	POINTS NO.	ANGLE OF T/OUT
1.	101/102	1 IN 12 (C.S.)	1.	HP 201	1 IN 8 1/2
2.	103/104	1 IN 12 (C.S.)	2.	HP 202	1 IN 8 1/2
3.	105/106	1 IN 12 (C.S.)	3.	HP 203	1 IN 8 1/2
4.	107	D.S.	4.	HP 204	1 IN 8 1/2
5.	115/116	1 IN 12 (C.S.)			
6.	119/120	1 IN 12 (C.S.)			
7.	125	D.S.			
8.	126	1 IN 8 1/2			
9.	128	D.S.			
10.	129/130	1 IN 8 1/2			

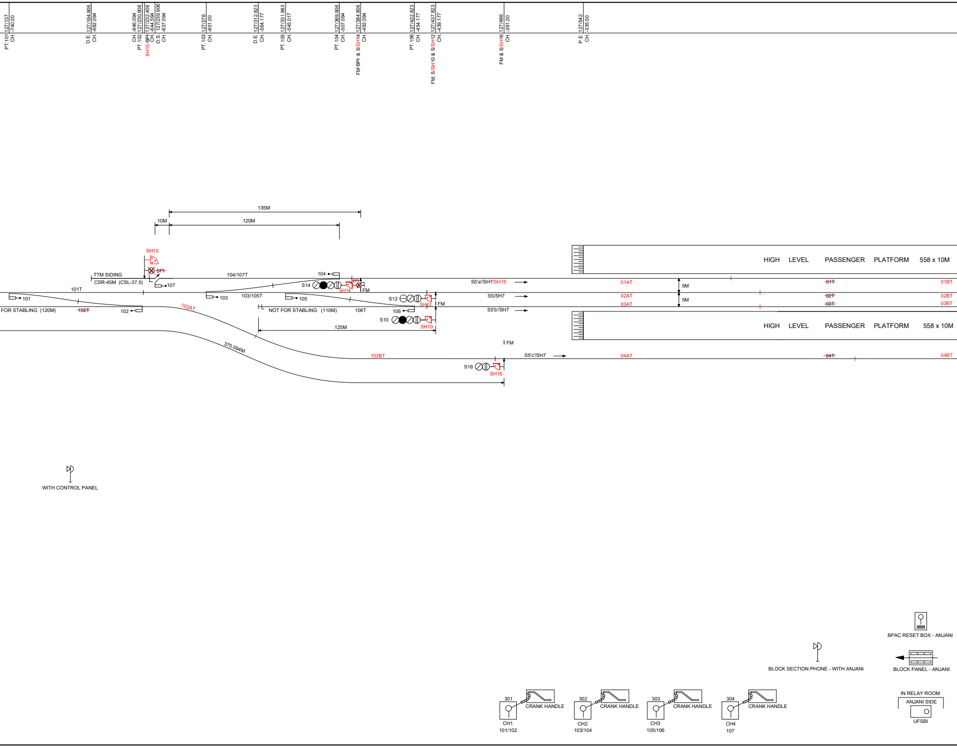
PT.101 127/137 CH. -740.00
D.E. 127/194.906 CH. -682.094
CH. -646.094 PT.102 127/230.906
SH15 ~~SPI~~ 127/232.406 CH. -644.594
D.S. 127/239.906 CH. -637.094
PT.103 127/276 CH. -601.00
D.E. 127/312.823 CH. -564.177
PT.105 127/331.983 CH. -545.017
PT.104 127/369.906 CH. -507.094
FM ~~SPI~~ & S/SH14 127/384.906 CH. -492.094
PT.106 127/422.823 CH. -454.177
FM, S/SH10 & S/SH12 127/437.823 CH. -439.177
FM & S/SH16 127/486 CH. -391.00
P.E. 127/542 CH. -335.00
135M
10M
120M
SH15
~~SPI~~
TTM SIDING
CSR-45M (CSL-37.5)
107
104/107T
104
S14
~~SPI~~
SH14
FM
101T
101
103
103/105T
105
S12
SH12
FM
FOR STABLING (120M)
~~102T~~
102
102AT
NOT FOR STABLING (110M)
106T
106
S10
SH10
125M
375.094M
102BT
S16
SH16
FM
S5'a'/SH7/SH15
S5/SH7
S5'b'/SH7
S5'c'/SH7
01AT
02AT
03AT
04AT
5M
5M
HIGH LEVEL PASSENGER PLATFORM 558 x 10M
~~01T~~
~~02T~~
~~03T~~
~~04T~~
01BT
02BT
03BT
04BT
HIGH LEVEL PASSENGER PLATFORM 558 x 10M
WITH CONTROL PANEL
BPAC RESET BOX - ANJANI
BLOCK SECTION PHONE - WITH ANJANI
BLOCK PANEL - ANJANI
301
CRANK HANDLE
CH1
101/102
302
CRANK HANDLE
CH2
103/104
303
CRANK HANDLE
CH3
105/106
304
CRANK HANDLE
CH4
107
IN RELAY ROOM
ANJANI SIDE
UFSBI

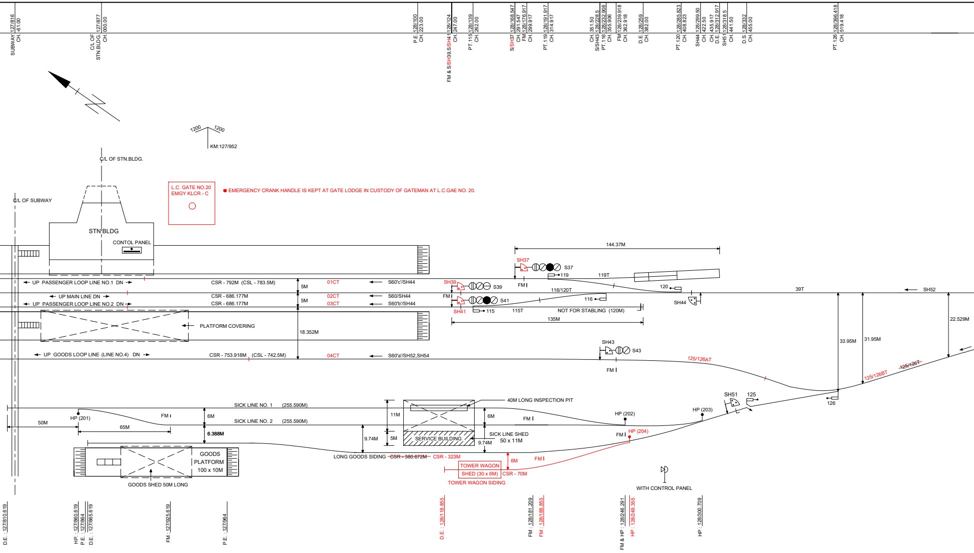
SUBWAY 127/816 CH. -61.00
C/L OF STN.BLDG. 127/877 CH. 000.00
P.E. 128/100 CH. 223.00
FM & S/SH39,S/SH41 128/124 CH. 247.00
PT. 115 128/139 CH. 262.00
S/SH37 128/168.547 CH. 291.547
FM 128/176.917 CH. 299.917
PT. 119 128/191.917 CH. 314.917
S/SH43 128/228.5 CH. 351.50
PT. 116 128/232.906 CH. 355.906
FM 128/239.918 CH. 362.918
D.E. 128/259 CH. 382.00
PT. 120 128/285.823 CH. 408.823
SH44 128/299.50 CH. 422.50
D.E. 128/312.917 CH. 435.917
SH51 128/318.5 CH. 441.50
D.S. 128/332 CH. 455.00
PT. 126 128/396.418 CH. 519.418
1200
1200
KM:127/952
C/L OF STN.BLDG.
C/L OF SUBWAY
L.C. GATE NO.20
EMGY KLCR - C
STN BLDG
CONTOL PANEL
UP PASSENGER LOOP LINE NO.1 DN
CSR - 792M (CSL - 783.5M)
5M
01CT
S60'c'/SH44
UP MAIN LINE DN
CSR - 686.177M
02CT
S60/SH44
UP PASSENGER LOOP LINE NO.2 DN
CSR - 686.177M
5M
03CT
S60'b'/SH44
PLATFORM COVERING
18.352M
UP GOODS LOOP LINE (LINE NO.4) DN
CSR - 753.918M (CSL - 742.5M)
04CT
S60'a'/SH52,SH54
144.37M
SH37
S37
119
119T
FM
SH39
S39
116/120T
120
39T
SH52
FM
SH41
S41
116
115
115T
NOT FOR STABLING (120M)
SH44
135M
22.529M
33.95M
31.95M
SH43
S43
FM
125/126AT
125/126BT
~~125/126T~~
SH51
125
126
40M LONG INSPECTION PIT
SICK LINE NO. 1 (255.590M)
SICK LINE NO. 2 (255.590M)
HP (201)
FM
50M
65M
6M
6.388M
11M
5M
9.74M
9.74M
6M
SERVICE BUILDING
SICK LINE SHED
50 x 11M
FM
HP (202)
HP (203)
FM
HP (204)
GOODS
PLATFORM
100 x 10M
GOODS SHED 50M LONG
LONG GOODS SIDING ~~CSR - 380.672M~~ CSR - 323M
6M
FM
TOWER WAGON
SHED (30 x 6M)
CSR - 70M
TOWER WAGON SIDING
WITH CONTROL PANEL
D.E. : 127/810.619
HP. : 127/860.619
P.E. : 127/864
D.E. : 127/865.619
FM : 127/925.619
P.E. : 127/964
D.E. : 128/118.855
FM : 128/181.209
FM : 128/188.855
FM & HP : 128/246.291
HP : 128/249.355
HP : 128/300.709

■ EMERGENCY CRANK HANDLE IS KEPT AT GATE LODGE IN CUSTODY OF GATEMAN AT L.C.GAE NO. 20.

WITH POINTS

PANEL IN SM's OFFICE	
DESCRIPTION	SPARE NUMBERS
SIGNALS 1 TO ~~60~~ 65	1,3,4,6,8,9,11,13,15,17 TO 36, 38, 40, 42, 45 TO 50,55,56,57 & 58~~,61,62,~~ 63 TO 65
POINTS 101 TO 130	108 TO 114,117,118,121,122,123, 124 & 127.
HAND POINTS 201 TO 210	~~204,~~ 205 TO 210
CONTROLS 301 TO 315	305, 306, 307, 309 & 312.

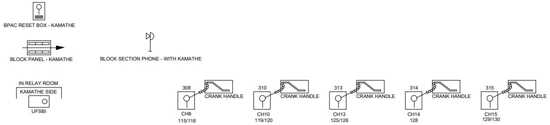
BPAC RESET BOX - KAMATHE
BLOCK PANEL - KAMATHE
BLOCK SECTION PHONE - WITH KAMATHE
IN RELAY ROOM
KAMATHE SIDE
UFSBI
308
CRANK HANDLE
CH8
115/116
310
CRANK HANDLE
CH10
119/120
313
CRANK HANDLE
CH13
125/126
314
CRANK HANDLE
CH14
128
315
CRANK HANDLE
CH15
129/130

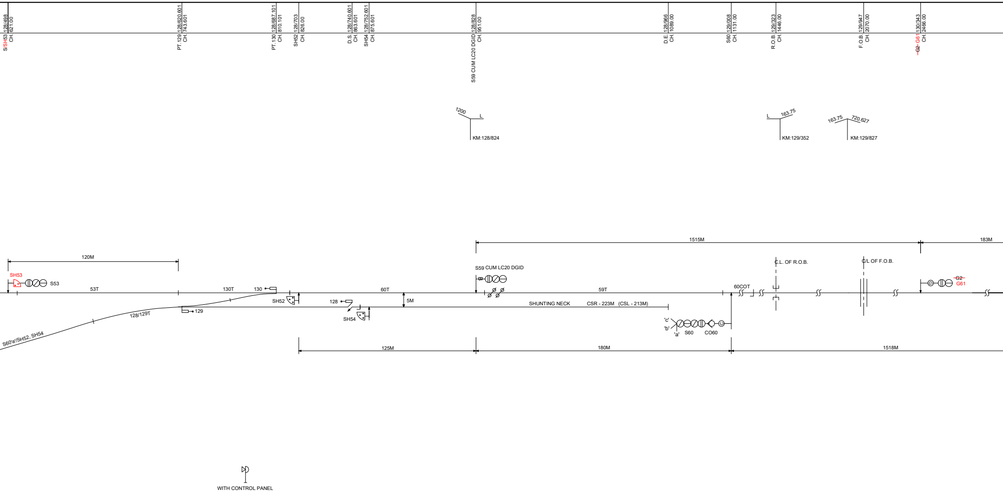
S/SH53 128/498 CH. 621.00
PT. 129 128/620.601 CH. 743.601
PT. 130 128/687.101 CH. 810.101
SH52 128/703 CH. 826.00
D.S. 128/740.601 CH. 863.601
SH54 128/752.601 CH. 875.601
S59 CUM LC20 DGID 128/828 CH. 951.00
D.E. 128/966 CH. 1089.00
S60 129/008 CH. 1131.00
R.O.B. 129/323 CH. 1446.00
F.O.B. 129/947 CH. 2070.00
~~G2~~ G61 130/343 CH. 2466.00
1200
L
KM:128/824
L
163.75
KM:129/352
163.75
720.627
KM:129/827
120M
SH53
S53
53T
130T
130
129
128/129T
S60'a'/SH52, SH54
SH52
128
SH54
60T
5M
S59 CUM LC20 DGID
1515M
183M
59T
SHUNTING NECK
CSR - 223M (CSL - 213M)
60COT
C.L. OF R.O.B.
C/L OF F.O.B.
~~G2~~
G61
'c'
'b'
'a'
S60
CO60
125M
180M
1518M
WITH CONTROL PANEL

SR. NO.	DESCRIPTION	REFERENCE TO APPLICATION	REFERENCE TO SANCTION
1.	COMBINATION OF SIGNAL UNDER THE PROVISION OF G.R.3.07(7) : (i) COMBINING OF UP INNER DISTANT OF UP HOME SIGNAL NO.60 OF CHIPLUN STATION WITH UP GATE STOP SIGNAL NO.62 OF L.C. GATE NO..20 (ii) COMBINING OF DOWN ADVANCED STARTER SIGNAL NO. S59 OF CHIPLUN STATION WITH DOWN INNER DISTANT SIGNAL OF DOWN GATE STOP SIGNAL NO.G61 OF L.C. GATE NO.20		
2.	RECKONING THE ADEQUATE DISTANCE UNDER THE PROVISION OF G.R.3.40 :		
	(i) FOR THE RECEPTION OF AN UP TRAIN ON LOOP LINE NO.1 FROM THE STARTER NO.S14 TO THE T.T.M. SIDING WITH POINT NO.103/104 NORMAL AND D.S. 107 OPEN FOR THE RECEPTION OF AN UP TRAIN ON GOODS LOOP LINE NO.4 FROM THE STARTER NO.S16 TO THE DEAD END WITH POINT NO.101/102 NORMAL. UNDER PROVISION OF OF G.R.3.40 (3) (b) FOR FOR THE RECEPTION OF AN UP TRAIN ON LOOP LINE NO.2 FROM THE STARTER NO.S10 TO THE SHORT DEAD END (110M) WITH POINT NO.105/106 NORMAL.	KR/CO/SG/7/2 DTD. 25-10-96	KRCL/4/96-97 DTD. 28-10-96
	(ii) FOR THE RECEPTION OF DOWN TRAIN ON LOOP LINE NO.1 FROM THE STARTER NO. S37 TO THE SANDED DEAD END WITH POINT NO. 119/120 NORMAL. FOR THE RECEPTION OF DOWN TRAIN ON LOOP LINE NO.2 FROM THE STARTER NO. S41 TO THE DEAD END WITH POINT NO.115/116 NORMAL. FOR THE RECEPTION OF AN DN TRAIN ON GOODS LOOP LINE NO.4 FROM THE STARTER NO.S43 TO THE SHUNTING NECK WITH POINT NO.125/126 AND 129/130 NORMAL AND D.S 128 OPEN.	KR/CO/W/1/4/Pt.IV DTD. 28-2-95 DTD. 2-1-96	C-12(111)196 DTD. 22-2-96

NATURE OF APPROVAL

5. SIGNALLING INSTALLATIONS SUIT TO 25 KV AC.

4. SANDED DEAD END AS PER DRG. NO. RDSO/T-347.

3. TELEPHONE CONNECTION PROVIDED BETWEEN SM's OFFICE AND INTERLOCKED 'SPL' CLASS L

2. A CO-OPERATIVE RESET BOXES ARE PROVIDED IN SM OFFICE AT CHIPLUN STATION FOR CHIPI
INCASE OF FAILURE OF BPAC, THE SYSTEM HAS TO BE RESET DULY ENSURING THE COMPLET

NOTE :- 1. BLOCK PANELS ALONG WITH UFSBI & BPAC (WITH HASSDAC) ARE PROVIDED FOR CHIPLUN - AN

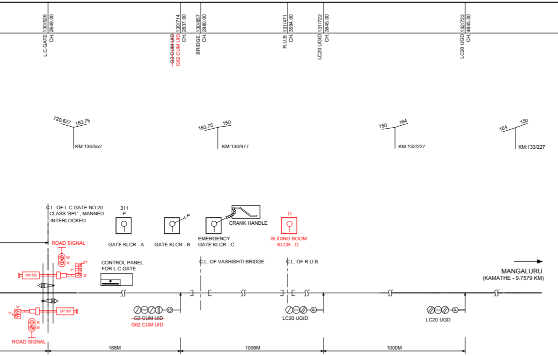
L.C.GATE 130/526
CH. 2649.00
~~G3 CUM UID~~
G62 CUM UID 130/714
CH. 2837.00
BRIDGE. 130/857
CH. 2980.00
R.U.B. 131/471
CH. 3594.00
LC20 UGID 131/722
CH. 3845.00
LC20 UGD 132/722
CH. 4845.00
720.627
163.75
KM:130/552
163.75
150
KM:130/977
150
164
KM:132/227
164
150
KM:133/227
C.L. OF L.C.GATE NO.20
CLASS 'SPL' , MANNED
INTERLOCKED
311
P
GATE KLCR - A
P
GATE KLCR - B
CRANK HANDLE
EMERGENCY
GATE KLCR - C
D
SLIDING BOOM
KLCR - D
ROAD SIGNAL
W
R
'D'
'Y'
'Z'
DN SB
CONTROL PANEL
FOR L.C.GATE
C.L. OF VASHISHTI BRIDGE
C.L. OF R.U.B.
MANGALURU
(KAMATHE - 9.7579 KM)
'X'
'Y'
UP SB
R
W
ROAD SIGNAL
~~G3 CUM UID~~
G62 CUM UID
LC20 UGID
LC20 UGD
188M
1008M
1000M

- L.C.GATE NO.20 IS PROVIDED WITH MOTOR OPERATED LIFTING BARRIER AND ELECTRICAL BOOM LOCKING (PLUNGER TYPE).
IT IS CONTROLLED BY XN & XXN / XRN BUTTONS OF CONTROL PANEL.

.C. GATE NO.20 AT KM : 130/526

LUN - ANJANI AND CHIPLUN - KAMATHE SECTION.
TE ARRIVAL OF LAST DEALT TRAIN.

NJANI AND CHIPLUN - KAMATHE SECTION

← UP - SIGNAL ASPECT CONTROL CHART

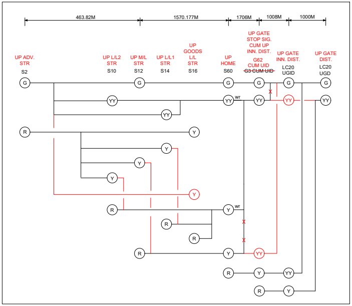
463.82M
1570.177M
1706M
1008M
1000M
UP ADV.
STR
S2
UP L/L2
STR
S10
UP M/L
STR
S12
UP L/L1
STR
S14
UP
GOODS
L/L
STR
S16
UP
HOME
S60
UP GATE
STOP SIG.
CUM UP
INN. DIST.
G62
CUM UID
~~G3 CUM UID~~
UP GATE
INN. DIST.
LC20
UGID
UP GATE
DIST.
LC20
UGD
G
YY
Y
R
wr
X

wr - WITH ROUTE INDICATOR

कोंकण रेलवे कॉर्पोरेशन लिमिटेड - सीओ, बेलापुर
KONKAN RAILWAY CORPORATION LIMITED - CO, BELAPUR

अन्तर्पाशन मानक STANDARD OF INTERLOCKING	III(R)	RATNAGIRI REGION रत्नागिरी क्षेत्र	चिपलून CHIPLUN सिगनलिंग नक्शा SIGNALLING PLAN
स्टेशन वर्ग CLASS OF STATION	B		
स्केल SCALE	TRANSVERSE - 1 : 500	आरेख संख्या : के आर/सी ओ/एस जी/डब्ल्यू2/69/एस पी DRG. NO. - KR / CO / SG / W2 / 69 / SP	
	LONGITUDINAL - 1 : 1000	अनुकूल अभियांत्रिकी नक्शा संख्या : के आर/आर एन/यार्ड/सी एच आय/09/आर1 TO SUIT ENGG. PLAN NO. - KR / RN / YARD / CHI / 09 / R1	
रेल संरक्षा आयुक्त मंजूरी संख्या CRS SANCTION NO.	C - 12 (114) / 96 DATED : 01.11.96	सुपरशेडेड आरेख संख्या : के आर/सी ओ/एस जी/ओ एल/69/एस पी SUPERSEDED DRG. NO. - KR / CO / SG / OL / 69 / SP	

IN CONNECTION WITH, i) UPDATION OF PLAN AS PER THE OBSERVATION OF CRS VIDE LETTER NO.- KRCL/393 DATED 07/08/2020 ii) CONVERSION OF NON-RE TO RE iii) PROVISION OF TOWER WAGON SIDING AND SHED (NON-INTERLOCKED) iv) SHUNT SIGNAL BELOW STARTER SIGNALS	26/08/2020	26/8/20	28/08/2020	Digitally signed by M M TORASKAR Date: 2020.08.30 23:56:10 +05'30'	D MAGESH Digitally signed by D MAGESH Date: 2020.08.31 09:34:07 +05'30'	ASHISH APTE 2020.08.31 18:38:52 +05'30'	V. C. SINHA
	एन.पी.बैकर N.P.BAIKAR जे.टी.ए (आरेख) JTA (DWG)	पी.एम.वीरकर P.M.VIRKAR जे.टी.ए (आरेख) JTA (DWG)	टी.आर.सावंत T.R.SAWANT व.सेक्शन इंजी. (सि.एवं दू.) SSE (S&T)	एम.एम.तोरसकर M.M.TORASKAR व. सि. एवं दू. सं. इंजी. (डी. एवं डी.) SSTE (D&D)	डी. मगेश D. MAGESH उप मु. सि. एवं दू. सं. इंजी. (समन्वय) DY. CSTE (CO-ORD)	आशीष आपटे ASHISH APTE मुख्य सि. एवं दू. सं. इंजी. CSTE	व्ही. सी. सिन्हा V. C. SINHA मुख्य परिचालन प्रबंधक C.O.M.
विवरण DESCRIPTION	तैयारकर्ता PREPARED BY		जांचकर्ता CHECKED BY			अनुमोदनकर्ता APPROVED BY	

संदर्भ REFERENCE	PREVIOUS ENGG. PLAN NO. - KR / RN / D / B / 174 - R1, R2, R3, R4, R5, R6, R7, R8, R9, R10, R11, R12; KR / RN / YARD / CHI / 09
	PREVIOUS SIG. PLAN. NO. - KR / CO / CSTE / RN / 69 / A, B, C, D; KR / CO / SG / 69 / SP / A, B; KR / CO / SG / 69 / SP / R1 / A